EANCOM® 2002 S4

CNTCND

Contractual conditions message

Edition 2016

1. Introduction 2
2. Message Structure Chart 3
3. Branching Diagram 5
4. Segments Description 11
5. Segments Layout 16
6. Example(s) 72

1. Introduction

Status

MESSAGE TYPE	: CNTCND
REFERENCE DIRECTORY	: D.01B
EANCOM® SUBSET VERSION	: 003

Definition

A message sent by a buyer to its supplier or by the supplier to the buyer, and/or other interested parties, providing the contractual conditions of a previously negotiated contract in order to enable the automatic validation of orders and in the verification of invoices prior to payment.

Principles

This message is typically used in the case where a general contract has been established between parties against which goods will be ordered over a period of time on an order by order basis. The contract will have been previously negotiated and accepted. This message only contains the information which can be used to automatically approve the transmission of an order or the correctness of an invoice. It is not intended to contain the totality of the contractual information.

This message is used to communicate contractual conditions for products already known by the trading partners. The message should not be used to perform the function of data alignment. The EANCOM® PRICAT, PRODAT and PARTIN messages should be used to perform data alignment before the CNTCND message is exchanged.

2. Message Structure Chart

Contractual Conditions Message Heading Section

UNH		1	M	1	- Message header
BGM		2	M	1	- Beginning of message
DTM		3	M	99	- Date/time/period
PAI		4	C	99	- Payment instructions
TOD		5	C	99	- Terms of delivery or transport
SG1			C	99	- RFF-DTM
RFF		6	M	1	- Reference
DTM		7	C	99	- Date/time/period
SG2			C	99	- PRI-RNG
PRI		8	M	1	- Price details
RNG		9	C	99	- Range details
SG3			C	99	- QTY-DTM
QTY		10	M	1	- Quantity
DTM		11	C	99	- Date/time/period
SG5			C	99	- CUX
CUX		12	M	1	- Currencies
SG6			C	99	- TAX
TAX		13	M	1	- Duty/tax/fee details
SG7			C	99	- PAT-DTM-PCD
PAT	X	14	M	1	- Payment terms basis
DTM		15	C	99	- Date/time/period
PCD		16	C	99	- Percentage details
SG8			M	99	- SEQ-NAD-SG10
SEQ		17	M	1	- Sequence details
NAD		18	M	1	- Name and address
SG10			C	99	- CTA-COM
CTA		19	M	1	- Contact information
COM		20	C	99	- Communication contact
SG12			C	99	- ALC-DTM-SG15-SG17
ALC		21	M	1	- Allowance or charge
DTM		22	C	99	- Date/time/period
SG15			C	99	- PCD-RNG
PCD		23	M	1	- Percentage details
RNG		24	C	99	- Range details
SG17			C	99	- MOA-RNG
MOA		25	M	1	- Monetary amount
RNG		26	C	99	- Range details

Contractual Conditions Message Detail Section

SG22			C	99	- LIN-PIA-IMD-SG23-SG24-SG26-SG29-SG36-SG37-SG38-SG40
LIN		27	M	1	- Line item
PIA		28	C	99	- Additional product id
IMD		29	C	99	- Item description
SG23			C	99	- RFF-DTM
RFF		30	M	1	- Reference
DTM		31	C	99	- Date/time/period
SG24			C	99	- TAX
TAX		32	M	1	- Duty/tax/fee details
SG26	+		C	99	- QTY-DTM
QTY	+	33	M	1	- Quantity
DTM	+	34	C	99	- Date/time/period
SG29			C	99	- ALC-DTM-SG32-SG34
ALC		35	M	1	- Allowance or charge
DTM		36	C	99	- Date/time/period
SG32			C	99	- PCD-RNG
PCD		37	M	1	- Percentage details
RNG		38	C	99	- Range details

2. Message Structure Chart

SG34		C	99	- MOA-RNG
MOA	39	M	1	- Monetary amount
RNG	40	C	99	- Range details
SG36		C	99	- PRI-RNG-DTM
PRI	41	M	1	- Price details
RNG	42	C	99	- Range details
DTM	43	C	99	- Date/time/period
SG37		C	99	- TOD
TOD	44	M	1	- Terms of delivery or transport
SG38		C	99	- PAC
PAC	45	M	1	- Package
SG40		C	99	- NAD
NAD	46	M	1	- Name and address
Contractual Conditions Message Summary Section				
UNT	47	M	1	- Message trailer

3. Branching Diagram

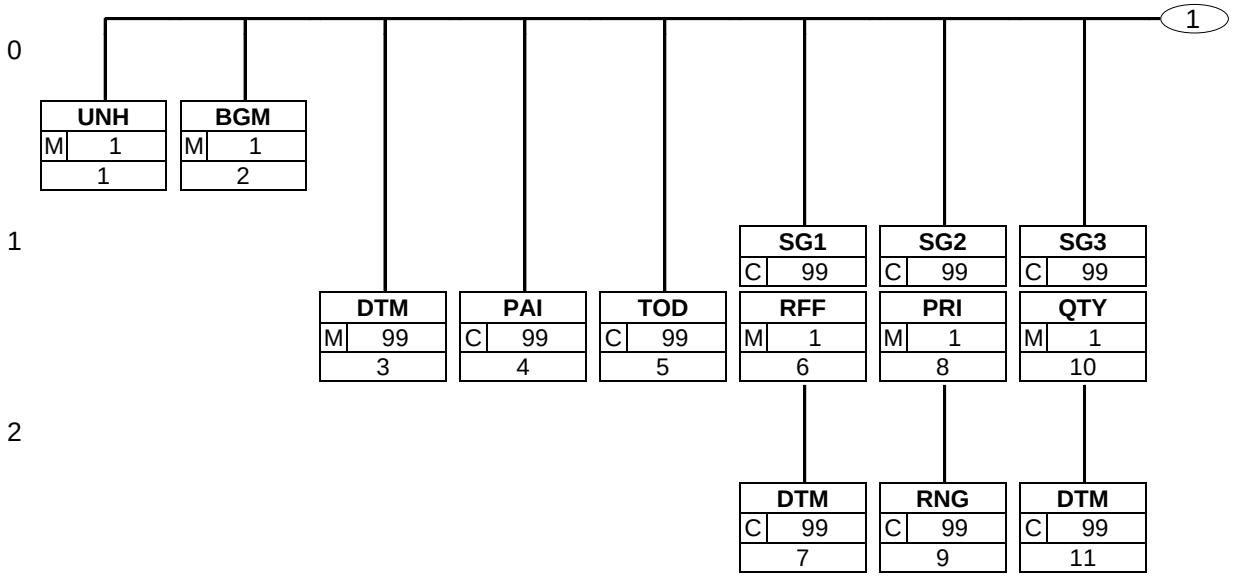

3. Branching Diagram

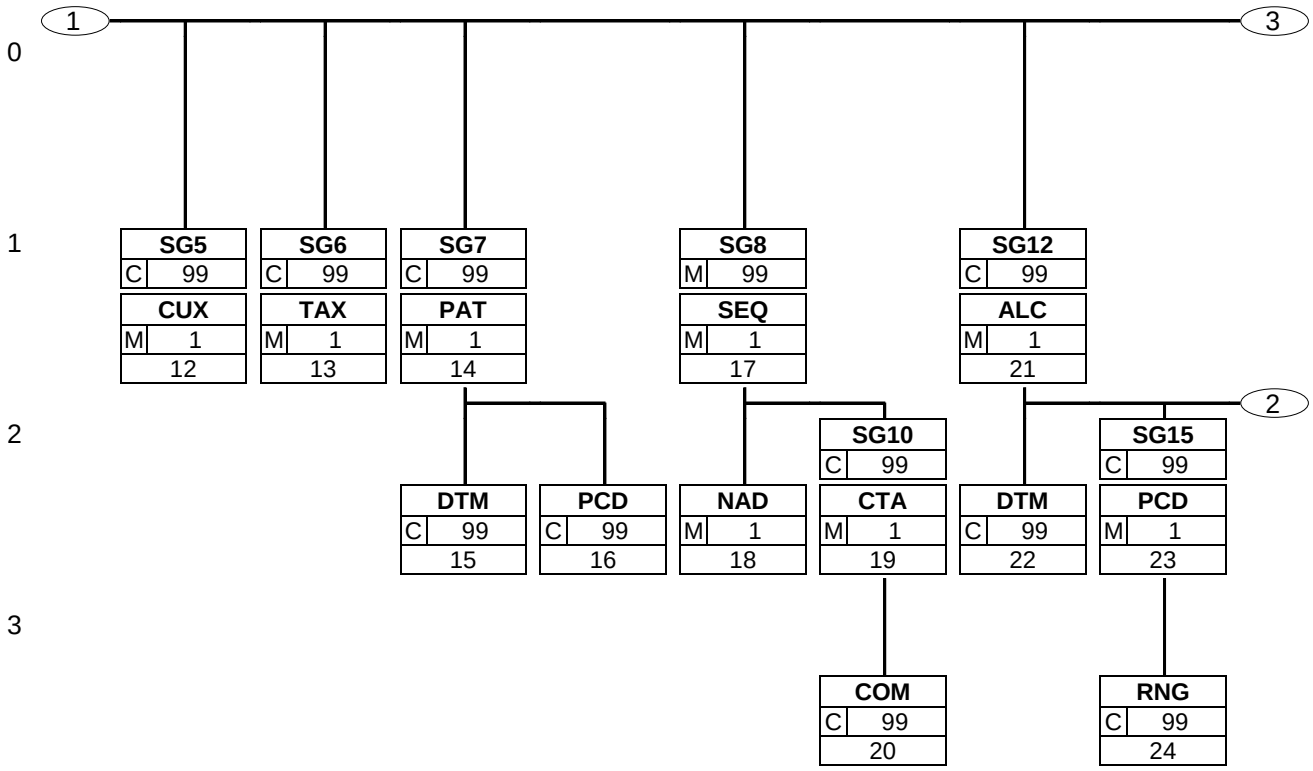

3. Branching Diagram

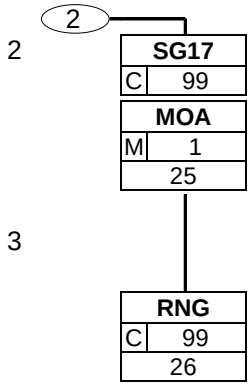

3. Branching Diagram

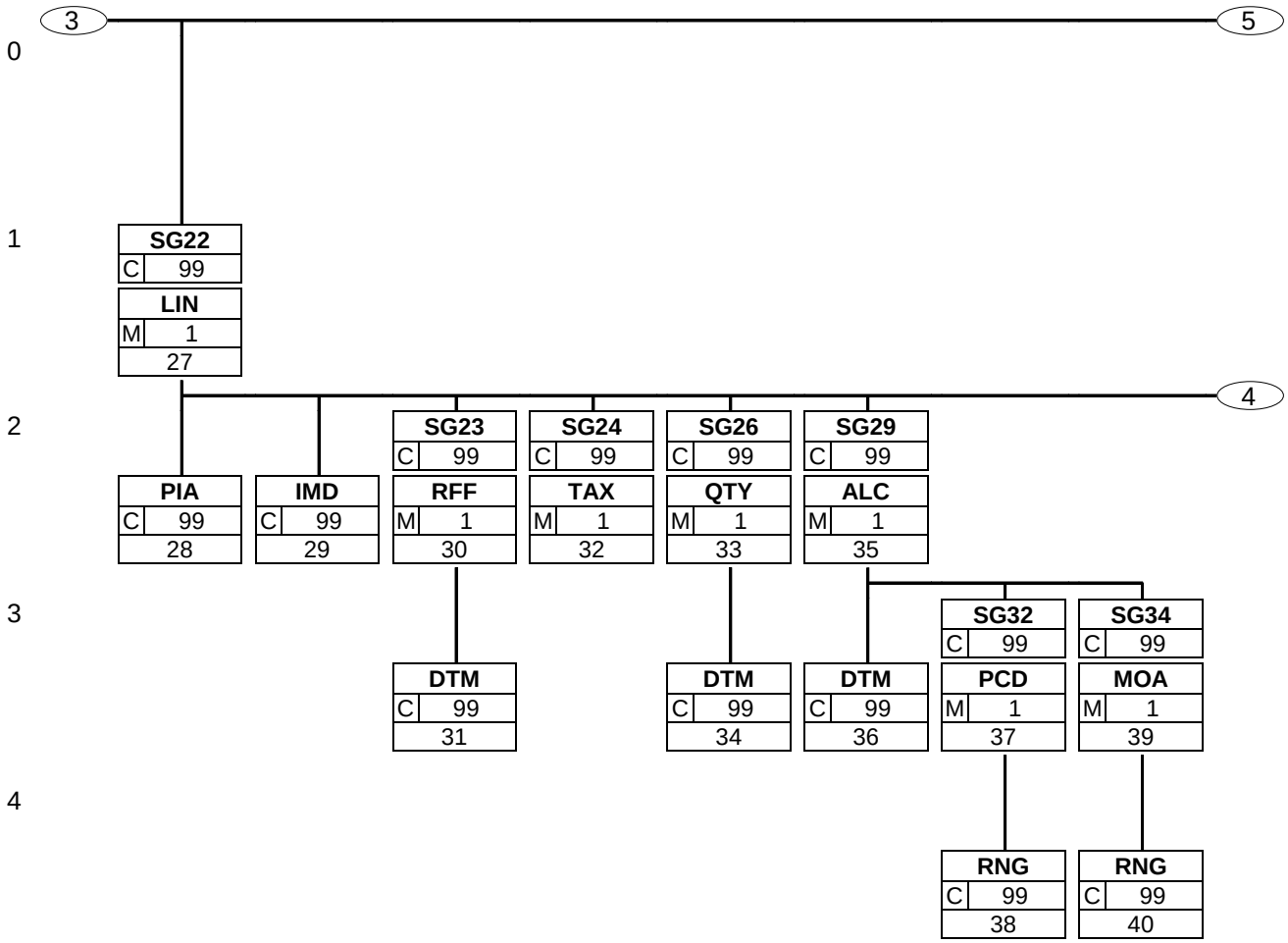

3. Branching Diagram

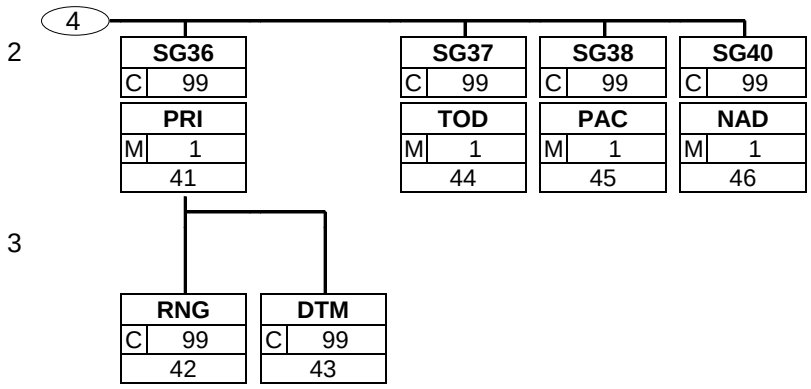

3. Branching Diagram

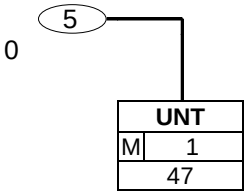

4. Segments Description

Contractual Conditions Message Heading Section

UNH - M 1	- Message header	
	This segment is used to head, identify and specify a message.	
BGM - M 1	- Beginning of message	
	This segment is used to indicate the type and function of a message and to transmit the identifying number.	
DTM - M 99	- Date/time/period	
	This segment is used to specify any dates related to the complete message.	
PAI - C 99	- Payment instructions	
	This segment indicates how payment for any invoices related to the contract should be made.	
TOD - C 99	- Terms of delivery or transport	
	This segment is used to specify the terms of delivery applicable to any orders or invoices related to the contract.	
SG1 - C 99	- **RFF-DTM**	
	A segment group to provide information such as contract revisions and, where necessary, their dates.	
RFF - M 1	- Reference	
	This segment will be used to indicate any references related to the complete contract.	
DTM - C 99	- Date/time/period	
	This segment is used to specify dates related to the RFF segment.	
SG2 - C 99	- **PRI-RNG**	
	A group of segments specifying prices which will be applied to given ranges of purchase quantities for the whole contract.	
PRI - M 1	- Price details	
	This segment is used to specify price information for the whole contract.	
RNG - C 99	- Range details	
	This segment is used to specify ranges which apply to the prices specified in previous PRI segment.	
SG3 - C 99	- **QTY-DTM**	
	A group of segments specifying quantities which are provisional or firm options to be taken up within a given date for the whole contract.	
QTY - M 1	- Quantity	
	This segment is used to identify the total quantity and the optional quantity of the contract.	
DTM - C 99	- Date/time/period	
	This segment is used to indicate the dates related to the optional quantity.	
SG5 - C 99	- **CUX**	
	A group of segments specifying the currencies valid for the whole contract.	
CUX - M 1	- Currencies	
	This segment is used to specify currency information for the complete message.	
SG6 - C 99	- **TAX**	
	A group of segments specifying tax related information.	
TAX - M 1	- Duty/tax/fee details	
	This segment is used to indicate the type, category, and rate of tax for the complete contract.	

4. Segments Description

SG7	- C	99	- **PAT-DTM-PCD**
			A segment group specifying the terms of payment applicable to the entire message.
PAT	- M	1	- Payment terms basis
			This segment is used to specify the payment terms for the complete contract.
DTM	- C	99	- Date/time/period
			This segment is used to specify any dates associated with the payment terms for the contract.
PCD	- C	99	- Percentage details
			This segment is used to specify percentages which will be allowed or charged if the party receiving the message pays (does not pay) to terms.
SG8	- M	99	- **SEQ-NAD-SG10**
			A group of segments identifying the parties with associated information.
SEQ	- M	1	- Sequence details
			This segment does not contain any information, it will act as a trigger.
NAD	- M	1	- Name and address
			This segment is used to identify the trading parties involved in the contract. Identification of the buyer and supplier of goods and services is mandatory in the contract. The delivery party, the issuer of the invoice, the invoicee, the payee and the manufacturing plant can also be identified if different to the buyer and supplier.
SG10	- C	99	- **CTA-COM**
			A group of segments identifying the contact person or department for a trading party and specifying the communication channel and number.
CTA	- M	1	- Contact information
			This segment is used to identify the department and/or person within the party specified in the NAD.
COM	- C	99	- Communication contact
			This segment is used to identify the communications number and the type of communications used for the department person identified in the CTA segment.
SG12	- C	99	- **ALC-DTM-SG15-SG17**
			A group of segments specifying allowances and charges for the whole contract.
ALC	- M	1	- Allowance or charge
			This segment is used to indicate any allowances or charges applicable to the total contract , e.g. packaging costs.
DTM	- C	99	- Date/time/period
			This segment is used to indicate the dates relating to the allowances and charges described in the ALC segment.
SG15	- C	99	- **PCD-RNG**
			A group of segments specifying the percentage for the allowance or charge e.g., The allowance/charge amount is calculated as 5% of the goods value or a price reduction of 5% may be specified if the goods quantity contracted is within the range 5 tons to 10 tons.
PCD	- M	1	- Percentage details
			This segment is used to specify information about the percentages of the allowance and or charges.
RNG	- C	99	- Range details
			This segment is used to specify ranges which apply to the previous PCD segment.

4. Segments Description

SG17 - C 99 - **MOA-RNG**

A group of segments specifying a monetary amount for an allowance or charge. A range to which the allowance or charge applies can be specified e.g., an allowance of 5000 EUR (Euro) may be specified if goods value contracted is greater than 100000 EUR (Euro).

MOA - M 1 - Monetary amount

This segment is used to specify monetary values concerning the allowances and charges.

RNG - C 99 - Range details

This segment is used to specify ranges which apply to the previous MOA segment.

Contractual Conditions Message Detail Section

SG22 - C 99 - **LIN-PIA-IMD-SG23-SG24-SG26-SG29-SG36-SG37-SG38-SG40**

A group of segments providing details of the individual ordered items. This Segment group may be repeated to give sub-line details.

LIN - M 1 - Line item

This segment is used to indicate the beginning of the detail section of the Contractual Conditions message. The detail section is formed by a repeating group of segments, always starting with a LIN segment.

PIA - C 99 - Additional product id

This segment is used to specify additional or substitutional item identification codes such as a buyer's or supplier's item number.

IMD - C 99 - Item description

This segment is used to provide a description for the current line item.

SG23 - C 99 - **RFF-DTM**

A group of segments giving references and where necessary, their dates, relating to the line item.

RFF - M 1 - Reference

This segment is used to provide references specific to the line item, and overrides any global references provided in the heading section of the message, if the same code value is used.

DTM - C 99 - Date/time/period

This segment is used to specify dates related to the RFF segment.

SG24 - C 99 - **TAX**

A group of segments specifying tax related information.

TAX - M 1 - Duty/tax/fee details

This segment is used to specify tax details for the line item if different to the header.

SG26 - C 99 - **QTY-DTM**

A group of segments to specify the scheduled quantities and date/time details of the schedule.

QTY - M 1 - Quantity

This segment is used to identify the quantity and the optional quantity of the line item.

DTM - C 99 - Date/time/period

This segment is used to indicate the dates related to previous QTY segment.

SG29 - C 99 - **ALC-DTM-SG32-SG34**

A group of segments specifying allowances and charges for the line item.

4. Segments Description

ALC - M 1	- Allowance or charge	
	This segment is used to specify any allowances or charges which apply only to the line item being contracted.	
DTM - C 99	- Date/time/period	
	This segment is used to indicate the dates relating to the allowances and charges described in the ALC segment.	
SG32 - C 99	- **PCD-RNG**	
	A group of segments specifying the percentage for the allowance or charge e.g. The allowance/charge amount is calculated as 5% of the goods value or a price reduction of 5% may be specified if the goods quantity ordered is within the range 5 tons to 10 tons.	
PCD - M 1	- Percentage details	
	This segment is used to specify information about the percentages of the allowance and or charges.	
RNG - C 99	- Range details	
	This segment is used to specify ranges which apply to the previous PCD segment.	
SG34 - C 99	- **MOA-RNG**	
	A group of segments specifying a monetary amount for an allowance or charge. A range to which the allowance or charge applies can be specified e.g. an allowance of 5000 EUR may be specified if goods value ordered is greater than 100000 EUR.	
MOA - M 1	- Monetary amount	
	This segment is used to specify monetary values concerning the allowances and charges.	
RNG - C 99	- Range details	
	This segment is used to specify ranges which apply to the previous MOA segment.	
SG36 - C 99	- **PRI-RNG-DTM**	
	A group of segments identifying the relevant pricing information for the goods or services ordered.	
PRI - M 1	- Price details	
	This segment is used to specify price information for the current line item.	
RNG - C 99	- Range details	
	This segment is used to specify ranges which apply to the previous PRI segment.	
DTM - C 99	- Date/time/period	
	This segment is specify dates and times relevant to the prices provided in the previous PRI segment.	
SG37 - C 99	- **TOD**	
	A group of segments indicating the terms of delivery for the line item where this is different to or not specified within the heading section.	
TOD - M 1	- Terms of delivery or transport	
	This segment is used to specify the terms of delivery.	
SG38 - C 99	- **PAC**	
	A group of segments identifying the packaging.	
PAC - M 1	- Package	
	This segment is used to specify the number and type of packages for the current line item.	
SG40 - C 99	- **NAD**	
	A group of segments identifying the parties relevant to the line item only.	

4. Segments Description

NAD - M 1 - Name and address

This segment is used to indicate the manufacturing plant and the delivery party of the article.

Contractual Conditions Message Summary Section

UNT - M 1 - Message trailer

This segment is a mandatory UN/EDIFACT segment. It must always be the last segment in the message.

5. Segments Layout

This section describes each segment used in the EANCOM® Contractual Conditions message. The original EDIFACT segment layout is listed. The appropriate comments relevant to the EANCOM® subset are indicated.

Notes:

1. The segments are presented in the sequence in which they appear in the message. The segment or segment group tag is followed by the (M)andatory / (C)onditional indicator, the maximum number of occurrences and the segment description.

2. Reading from left to right, in column one, the data element tags and descriptions are shown, followed by in the second column the EDIFACT status (M or C), the field format, and the picture of the data elements. These first pieces of information constitute the original EDIFACT segment layout.

   Following the EDIFACT information, EANCOM® specific information is provided in the third, fourth, and fifth columns. In the third column a status indicator for the use of (C)onditional EDIFACT data elements (see 2.1 through 2.3 below), in the fourth column the restricted indicator (see point 3 on the following page), and in the fifth column notes and code values used for specific data elements in the message.

2.1 (M)andatory data elements in EDIFACT segments retain their status in EANCOM®.

2.2 Additionally, there are five types of status for data elements with a (C)onditional EDIFACT status, whether for simple, component or composite data elements. These are listed below and can be identified when relevant by the following abbreviations:

- REQUIRED	**R**	Indicates that the entity is required and must be sent.
- ADVISED	**A**	Indicates that the entity is advised or recommended.
- DEPENDENT	**D**	Indicates that the entity must be sent in certain conditions, as defined by the relevant explanatory note.
- OPTIONAL	**O**	Indicates that the entity is optional and may be sent at the discretion of the user.
- NOT USED	**N**	Indicates that the entity is not used and should be omitted.

2.3 If a composite is flagged as **N, NOT USED**, all data elements within that composite will have blank status indicators assigned to them.

3. Status indicators detailed in the fourth column which directly relate to the code values detailed in the fifth **column** may have two values:

- RESTRICTED	*****	A data element marked with an asterisk (*) in the fourth column indicates that the listed codes in column five are the only codes available for use with this data element, in this segment, in this message.
- OPEN		All data elements where coded representation of data is possible and a restricted set of code values is not indicated are open (no asterisk in fourth column). The available codes are listed in the EANCOM® Data Elements and Code Sets Directory. Code values may be given as examples or there may be a note on the format or type of code to be used.

4. Different colours are used for the code values in the segment details: restricted codes are in red and open codes in blue.

5. Segments Layout

Segment number: 1

UNH	- M	1 - Message header

Function:

To head, identify and specify a message.

Notes:
1. Data element S009/0057 is retained for upward compatibility. The use of S016 and/or S017 is encouraged in preference.
2. The combination of the values carried in data elements 0062 and S009 shall be used to identify uniquely the message within its group (if used) or if not used, within its interchange, for the purpose of acknowledgement.

		EDIFACT	GS1	*	Description
0062	Message reference number	M an..14	**M**		Senders unique message reference. Sequence number of messages in the interchange. DE0062 in UNT will have the same value. Generated by the sender.
S009	MESSAGE IDENTIFIER	M	**M**		
0065	Message type	M an..6	**M**	*	CNTCND = Contractual conditions message
0052	Message version number	M an..3	**M**	*	D = Draft version/UN/EDIFACT Directory
0054	Message release number	M an..3	**M**	*	01B = Release 2001 - B
0051	Controlling agency, coded	M an..3	**M**	*	UN = UN/CEFACT
0057	Association assigned code	C an..6	**R**	*	EAN003 = GS1 version control number (GS1 Permanent Code) Indicates that the message is the EANCOM version 003 of the UNSM Contractual Conditions message.
0110	Code list directory version number	C an..6	**O**		This data element can be used to identify the codelist agreed by the interchange partners, e.g. EAN001 = EANCOM 2002 S4 codelist released on 01.12.2002 by GS1.
0113	Message type sub-function identification	C an..6	**N**		
0068	Common access reference	C an..35	**N**		
S010	STATUS OF THE TRANSFER	C	**N**		
0070	Sequence of transfers	M n..2			
0073	First and last transfer	C a1			
S016	MESSAGE SUBSET IDENTIFICATION	C	**N**		
0115	Message subset identification	M an..14			
0116	Message subset version number	C an..3			
0118	Message subset release number	C an..3			
0051	Controlling agency, coded	C an..3			
S017	MESSAGE IMPLEMENTATION GUIDELINE IDENTIFICATION	C	**N**		
0121	Message implementation guideline identification	M an..14			
0122	Message implementation guideline version number	C an..3			

5. Segments Layout

Segment number: 1

		EDIFACT	GS1	*	Description
0124	Message implementation guideline release number	C an..3			
0051	Controlling agency, coded	C an..3			
S018	SCENARIO IDENTIFICATION	C	**N**		
0127	Scenario identification	M an..14			
0128	Scenario version number	C an..3			
0130	Scenario release number	C an..3			
0051	Controlling agency, coded	C an..3			

Segment Notes:

This segment is used to head, identify and specify a message.
DE's 0065, 0052, 0054: Indicates that the message is a UNSM Contractual Conditions message based on the D.01B directory under the control of UN/CEFACT.

Example:
UNH+ME000001+CNTCND:D:01B:UN:EAN003'

5. Segments Layout

Segment number: 2

BGM - M 1 - Beginning of message					
Function: To indicate the type and function of a message and to transmit the identifying number.					
		EDIFACT	GS1	*	Description
C002	DOCUMENT/MESSAGE NAME	C	**R**		
1001	Document name code	C an..3	**R**	*	315 = Contract
1131	Code list identification code	C an..17	**N**		
3055	Code list responsible agency code	C an..3	**N**		
1000	Document name	C an..35	**N**		
C106	DOCUMENT/MESSAGE IDENTIFICATION	C	**R**		
1004	Document identifier	C an..35	**R**		Number of the contract assigned by the sender. For global unique identification of documents Global Document Type Identifier (GDTI) is available.
1056	Version identifier	C an..9	**N**		
1060	Revision identifier	C an..6	**N**		
1225	Message function code	C an..3	**R**	*	5 = Replace 7 = Duplicate 9 = Original 5 = Replace - The current contract replaces completely the contract identified in the RFF segment in group 1. 7 = Duplicate - A re-transmission involving the same parties, on the specific request of the receiver. The number of the contract stays the same. 9 = Original - An original transmission of the message.
4343	Response type code	C an..3	**D**	*	AC = Acknowledge - with detail and change AI = Acknowledge only changes NA = No acknowledgement needed
Segment Notes: This segment is used to indicate the type and function of a message and to transmit the identifying number. Example: BGM+315+100001+9'					

5. Segments Layout

Segment number: 3

DTM - M 99 - Date/time/period					
Function: To specify date, and/or time, or period.					
		EDIFACT	GS1	*	Description
C507	DATE/TIME/PERIOD	M	**M**		
2005	Date or time or period function code qualifier	M an..3	**M**	*	137 = Document/message date/time 157 = Validity start date 273 = Validity period 21E = End validity date (GS1 Temporary Code)
2380	Date or time or period value	C an..35	**R**		
2379	Date or time or period format code	C an..3	**R**		203 = CCYYMMDDHHMM

Segment Notes:

This segment is used to specify any dates related to the complete message.
DE 2005: Identification of the 'Document/message date/time' (code value 137) is mandatory in an EANCOM message.

Example:
DTM+137:200208301200:203'

5. Segments Layout

Segment number: 4

PAI	- C	99 - Payment instructions			
Function: To specify the instructions for payment.					
		EDIFACT	GS1	*	Description
C534	PAYMENT INSTRUCTION DETAILS	M	**M**		
4439	Payment conditions code	C an..3	**O**		1 = Direct payment OA = Open account (GS1 Temporary Code)
4431	Payment guarantee means code	C an..3	**O**		20 = Goods as security
4461	Payment means code	C an..3	**O**		20 = Cheque 21 = Banker's draft 27 = ACH demand corporate trade payment (CTP) debit 60 = Promissory note 70 = Bill drawn by the creditor on the debtor
1131	Code list identification code	C an..17	**O**		
3055	Code list responsible agency code	C an..3	**D**		
4435	Payment channel code	C an..3	**O**		1 = Ordinary post

Segment Notes:

This segment indicates how payment for any invoices related to the contract should be made.

Example:
PAI+1:20:20'

5. Segments Layout

Segment number: 5

TOD	- C	99 - Terms of delivery or transport			
Function: To specify terms of delivery or transport.					
		EDIFACT	GS1	*	Description
4055	Delivery or transport terms function code	C an..3	**R**		3 = Price and despatch condition 5 = Transport condition 6 = Delivery condition
4215	Transport charges payment method code	C an..3	**O**		CC = Collect NC = Service freight, no charge PC = Prepaid but charged to customer
C100	TERMS OF DELIVERY OR TRANSPORT	C	**A**		
4053	Delivery or transport terms description code	C an..3	**O**		INCOTERMS (See EANCOM Codes Set) If INCOTERMS are applicable, then DE 3055 has to contain code value "9" and DE 1131 must be used.
1131	Code list identification code	C an..17	**D**		
3055	Code list responsible agency code	C an..3	**D**		
4052	Delivery or transport terms description	C an..70	**O**		
4052	Delivery or transport terms description	C an..70	**O**		

Segment Notes:

This segment is used to specify the terms of delivery applicable to any orders or invoices related to the contract.

Example:
TOD+3+CC+CIF:2E:9'

5. Segments Layout

Segment number: 6

SG1	- C	99	- RFF-DTM
RFF	- M	1	- Reference

Function:

To specify a reference.

		EDIFACT	GS1	*	Description
C506	REFERENCE	M	**M**		
1153	Reference code qualifier	M an..3	**M**		AJS = Agreement number CT = Contract number FX = Foreign exchange contract number PL = Price list number SZ = Specification number XB5 = Tooling contract number (GS1 Temporary Code) XB6 = Formula number (GS1 Temporary Code) XB7 = Pre-agreement number (GS1 Temporary Code) If a contract is replaced by a new one, the code "CT" should be used to refer to the old contract.
1154	Reference identifier	C an..70	**R**		
1156	Document line identifier	C an..6	**N**		
4000	Reference version identifier	C an..35	**N**		
1060	Revision identifier	C an..6	**N**		

Segment Notes:

This segment will be used to indicate any references related to the complete contract.

Example:
RFF+SZ:1259874'

5. Segments Layout

Segment number: 7

SG1	- C	99 -	RFF-DTM
DTM	- C	99 -	Date/time/period

Function:

To specify date, and/or time, or period.

		EDIFACT	GS1	*	Description
C507	DATE/TIME/PERIOD	M	**M**		
2005	Date or time or period function code qualifier	M an..3	**M**	*	171 = Reference date/time
2380	Date or time or period value	C an..35	**R**		
2379	Date or time or period format code	C an..3	**R**		102 = CCYYMMDD

Segment Notes:

This segment is used to specify dates related to the RFF segment.

Example:
DTM+171:20020830:102'

5. Segments Layout

Segment number: 8

SG2	- C	99	- PRI-RNG
PRI	- M	1	- Price details

Function:

To specify price information.

		EDIFACT	GS1	*	Description
C509	PRICE INFORMATION	C	**R**		
5125	Price code qualifier	M an..3	**M**		AAA = Calculation net AAB = Calculation gross Note 1 - AAA : Calculation net - This price includes all allowances and charges. Note 2 - AAB : Calculation gross - This price does not include all allowances and charges.
5118	Price amount	C n..15	**R**		
5375	Price type code	C an..3	**O**		CA = Catalogue
5387	Price specification code	C an..3	**O**		
5284	Unit price basis value	C n..9	**N**		
6411	Measurement unit code	C an..3	**N**		
5213	Sub-line item price change operation code	C an..3	**N**		

Segment Notes:

This segment is used to specify price information for the whole contract.

Example:
PRI+AAA:1458:CA:AAE'

5. Segments Layout

Segment number: 9

SG2	- C	99 -	PRI-RNG
RNG	- C	99 -	Range details

Function:

To identify a range.

		EDIFACT	GS1	*	Description
6167	Range type code qualifier	M an..3	**M**		4 = Quantity range
C280	RANGE	C	**R**		
6411	Measurement unit code	M an..3	**M**		KGM = kilogram H87 = Piece
6162	Range minimum value	C n..18	**O**		
6152	Range maximum value	C n..18	**O**		

Segment Notes:

This segment is used to specify ranges which apply to the prices specified in previous PRI segment.

Example:
RNG+4+PCE:50:5000'

5. Segments Layout

Segment number: 10

SG3	- C	99 -	QTY-DTM
QTY	- M	1 -	Quantity

Function:

To specify a pertinent quantity.

		EDIFACT	GS1	*	Description
C186	QUANTITY DETAILS	M	**M**		
6063	Quantity type code qualifier	M an..3	**M**		135 = Period quantity, planned 75E = Optional quantity (GS1 Temporary Code)
6060	Quantity	M an..35	**M**		
6411	Measurement unit code	C an..3	**D**		This dataelement is only used if the product is of variable quantity.

Segment Notes:

This segment is used to identify the total quantity and the optional quantity of the contract.

Example:
QTY+135:200'

5. Segments Layout

Segment number: 11

SG3	- C	99 -	QTY-DTM
DTM	- C	99 -	Date/time/period

Function:

To specify date, and/or time, or period.

		EDIFACT	GS1	*	Description
C507	DATE/TIME/PERIOD	M	**M**		
2005	Date or time or period function code qualifier	M an..3	**M**		21E = End validity date (GS1 Temporary Code)
2380	Date or time or period value	C an..35	**R**		
2379	Date or time or period format code	C an..3	**R**		102 = CCYYMMDD

Segment Notes:

This segment is used to indicate the dates related to the optional quantity.

Example:
DTM+21E:20020701:102'

5. Segments Layout

Segment number: 12

SG5	- C	99 -	CUX
CUX	- M	1 -	Currencies

Function:

To specify currencies used in the transaction and relevant details for the rate of exchange.

		EDIFACT	GS1	*	Description
C504	CURRENCY DETAILS	C	**R**		
6347	Currency usage code qualifier	M an..3	**M**	*	2 = Reference currency
6345	Currency identification code	C an..3	**R**		Code ISO 4217 three alpha.
6343	Currency type code qualifier	C an..3	**R**	*	9 = Order currency
6348	Currency rate value	C n..4	**N**		
C504	CURRENCY DETAILS	C	**D**		
6347	Currency usage code qualifier	M an..3	**M**	*	3 = Target currency
6345	Currency identification code	C an..3	**R**		ISO 4217 three alpha.
6343	Currency type code qualifier	C an..3	**R**		8 = Price list currency 11 = Payment currency
6348	Currency rate value	C n..4	**O**		
5402	Currency exchange rate	C n..12	**D**		The rate of exchange which applies between the reference and the target currency.
6341	Exchange rate currency market identifier	C an..3	**N**		

Segment Notes:

This segment is used to specify currency information for the complete message.
The CUX Segment is mandatory for international exchanges.
It is not needed to indicate the invoice currency and the rate of exchange here.

Example:
CUX+2:EUR:9'

5. Segments Layout

Segment number: 13

SG6	- C	99 -	TAX
TAX	- M	1 -	Duty/tax/fee details

Function:

To specify relevant duty/tax/fee information.

		EDIFACT	GS1	*	Description
5283	Duty or tax or fee function code qualifier	M an..3	**M**		5 = Customs duty 7 = Tax
C241	DUTY/TAX/FEE TYPE	C	**D**		
5153	Duty or tax or fee type name code	C an..3	**O**		ENV = Environmental tax GST = Goods and services tax VAT = Value added tax
1131	Code list identification code	C an..17	**O**		
3055	Code list responsible agency code	C an..3	**D**		
5152	Duty or tax or fee type name	C an..35	**O**		
C533	DUTY/TAX/FEE ACCOUNT DETAIL	C	**O**		
5289	Duty or tax or fee account code	M an..6	**M**		
1131	Code list identification code	C an..17	**O**		
3055	Code list responsible agency code	C an..3	**D**		
5286	Duty or tax or fee assessment basis value	C an..15	**O**		
C243	DUTY/TAX/FEE DETAIL	C	**A**		
5279	Duty or tax or fee rate code	C an..7	**O**		
1131	Code list identification code	C an..17	**O**		
3055	Code list responsible agency code	C an..3	**D**		
5278	Duty or tax or fee rate	C an..17	**R**		The actual rate of tax/duty.
5273	Duty or tax or fee rate basis code	C an..12	**O**		
1131	Code list identification code	C an..17	**O**		
3055	Code list responsible agency code	C an..3	**D**		
5305	Duty or tax or fee category code	C an..3	**D**		A = Mixed tax rate E = Exempt from tax S = Standard rate
3446	Party tax identifier	C an..20	**O**		
1227	Calculation sequence code	C an..3	**N**		

Segment Notes:

This segment is used to indicate the type, category, and rate of tax for the complete contract.

Dependency Notes:
DE C241 and 5305: Tax types and categories will vary from country to country. They should be defined by national guidelines.

5. Segments Layout

Segment number: 13

Example:
TAX+7+VAT+++:::21+S'

5. Segments Layout

Segment number: 14

SG7	- C	99 -	PAT-DTM-PCD
PAT	- M	1 -	Payment terms basis

Function:

To specify the payment terms basis.

Notes:
1. This segment will be removed effective with directory D.02B.

		EDIFACT	GS1	*	Description
4279	Payment terms type code qualifier	M an..3	**M**		1 = Basic 3 = Fixed date 22 = Discount
C110	PAYMENT TERMS	C	**O**		
4277	Payment terms description identifier	M an..17	**M**		
1131	Code list identification code	C an..17	**O**		
3055	Code list responsible agency code	C an..3	**D**		
4276	Payment terms description	C an..35	**O**		
4276	Payment terms description	C an..35	**O**		
C112	TERMS/TIME INFORMATION	C	**O**		
2475	Time reference code	M an..3	**M**		5 = Date of invoice 21 = Date goods received by buyer 23 = Date goods received by carrier 81 = Date of shipment as evidenced by the transport document(s) 83 = Requested date of delivery
2009	Terms time relation code	C an..3	**O**		3 = After reference
2151	Period type code	C an..3	**O**		D = Day M = Month WD = Working days Y = Year
2152	Period count quantity	C n..3	**O**		Number of periods for payment.

Segment Notes:

This segment is used to specify the payment terms for the complete contract.

Example:
The following example indicates basic payment terms with payment due 30 days after the reference date which is the invoice date.
PAT+1++5:3:D:30'

5. Segments Layout

Segment number: 15

SG7	- C	99 -	PAT-DTM-PCD
DTM	- C	99 -	Date/time/period

Function:

To specify date, and/or time, or period.

		EDIFACT	GS1	*	Description
C507	DATE/TIME/PERIOD	M	**M**		
2005	Date or time or period function code qualifier	M an..3	**M**	*	7 = Effective date/time 13 = Terms net due date
2380	Date or time or period value	C an..35	**R**		
2379	Date or time or period format code	C an..3	**R**		102 = CCYYMMDD

Segment Notes:

This segment is used to specify any dates associated with the payment terms for the contract.

Example:
DTM+13:20020831:102'
Net due date for payment the 31st August 2002.

5. Segments Layout

Segment number: 16

SG7	- C	99 -	PAT-DTM-PCD
PCD	- C	99 -	Percentage details

Function:

To specify percentage information.

		EDIFACT	GS1	*	Description
C501	PERCENTAGE DETAILS	M	**M**		
5245	Percentage type code qualifier	M an..3	**M**		7 = Percentage of invoice 12 = Discount 15 = Penalty percentage 16 = Interest percentage
5482	Percentage	C n..10	**R**		
5249	Percentage basis identification code	C an..3	**O**		13 = Invoice value
1131	Code list identification code	C an..17	**O**		
3055	Code list responsible agency code	C an..3	**D**		
4405	Status description code	C an..3	**N**		

Segment Notes:

This segment is used to specify percentages which will be allowed or charged if the party receiving the message pays (does not pay) to terms.

Example:
PCD+15:2.5:13'

5. Segments Layout

Segment number: 17

SG8	- M	99	-	SEQ-NAD-SG10
SEQ	- M	1	-	Sequence details

Function:

To provide details relating to the sequence.

		EDIFACT	GS1	*	Description
1229	Action request/notification description code	C an..3	**N**		
C286	SEQUENCE INFORMATION	C	**R**		
1050	Sequence position identifier	M an..10	**M**		
1159	Sequence identifier source code	C an..3	**N**		
1131	Code list identification code	C an..17	**N**		
3055	Code list responsible agency code	C an..3	**N**		

Segment Notes:

This segment does not contain any information, it will act as a trigger.

Example:
SEQ++1'

5. Segments Layout

Segment number: 18

SG8	- M	99	-	SEQ-NAD-SG10
NAD	- M	1	-	Name and address

Function:

To specify the name/address and their related function, either by C082 only and/or unstructured by C058 or structured by C080 thru 3207.

		EDIFACT	GS1	*	Description
3035	Party function code qualifier	M an..3	**M**		BY = Buyer DP = Delivery party II = Issuer of invoice IV = Invoicee MF = Manufacturer of goods PE = Payee SU = Supplier
C082	PARTY IDENTIFICATION DETAILS	C	**A**		
3039	Party identifier	M an..35	**M**		GLN - Format n13 For identification of parties it is recommended to use GLN.
1131	Code list identification code	C an..17	**N**		
3055	Code list responsible agency code	C an..3	**R**	*	9 = GS1
C058	NAME AND ADDRESS	C	**O**		This composite may only be used to fulfill the requirements of directive 2003/58/EC, article 4.
3124	Name and address description	M an..35	**M**		
3124	Name and address description	C an..35	**O**		
3124	Name and address description	C an..35	**O**		
3124	Name and address description	C an..35	**O**		
3124	Name and address description	C an..35	**O**		
C080	PARTY NAME	C	**D**		
3036	Party name	M an..35	**M**		Party Name in clear text.
3036	Party name	C an..35	**O**		
3036	Party name	C an..35	**O**		
3036	Party name	C an..35	**O**		
3036	Party name	C an..35	**O**		
3045	Party name format code	C an..3	**O**		
C059	STREET	C	**D**		
3042	Street and number or post office box identifier	M an..35	**M**		
3042	Street and number or post office box identifier	C an..35	**O**		
3042	Street and number or post office box identifier	C an..35	**O**		
3042	Street and number or post office box identifier	C an..35	**O**		
3164	City name	C an..35	**D**		City/Town name, clear text
C819	COUNTRY SUB-ENTITY	C	**D**		

5. Segments Layout

Segment number: 18

		EDIFACT	GS1	*	Description
	DETAILS				
3229	Country sub-entity name code	C an..9	**O**		
1131	Code list identification code	C an..17	**O**		
3055	Code list responsible agency code	C an..3	**O**		
3228	Country sub-entity name	C an..70	**O**		County/State, clear text.
3251	Postal identification code	C an..17	**D**		Postal Code
3207	Country name code	C an..3	**D**		ISO 3166 two alpha code

Segment Notes:

This segment is used to identify the trading parties involved in the contract. Identification of the buyer and supplier of goods and services is mandatory in the contract. The delivery party, the issuer of the invoice, the invoicee, the payee and the manufacturing plant can also be identified if different to the buyer and supplier.

Example:
NAD+BY+5412345000020::9'
NAD+SU+4012345500004::9'
NAD+DP+5412345000013::9'

Dependency Notes:
The following composites and data elements are only used when a coded name and address can not be used.
The affected composites and data elements are as follows:
C080 - C059 - 3164 - C819 - 3251 - 3207

5. Segments Layout

Segment number: 19

SG8	- M	99 -	SEQ-NAD-SG10
SG10	- C	99 -	CTA-COM
CTA	- M	1 -	Contact information

Function:

To identify a person or a department to whom communication should be directed.

		EDIFACT	GS1	*	Description
3139	Contact function code	C an..3	**R**		IC = Information contact
C056	DEPARTMENT OR EMPLOYEE DETAILS	C	**O**		
3413	Department or employee name code	C an..17	**O**		
3412	Department or employee name	C an..35	**O**		

Segment Notes:

This segment is used to identify the department and/or person within the party specified in the NAD.
Global Location Number GLN - Format n13 - is particularly suitable for this purpose.

Example:
CTA+IC+MARK CARTER'

5. Segments Layout

Segment number: 20

SG8	- M	99 -	SEQ-NAD-SG10
SG10	- C	99 -	CTA-COM
COM	- C	99 -	Communication contact

Function:

To identify a communication number of a department or a person to whom communication should be directed.

		EDIFACT	GS1	*	Description
C076	COMMUNICATION CONTACT	M	**M**		
3148	Communication address identifier	M an..512	**M**		
3155	Communication address code qualifier	M an..3	**M**		EM = Electronic mail TE = Telephone AO = Uniform Resource Location (URL)

Segment Notes:

This segment is used to identify the communications number and the type of communications used for the department person identified in the CTA segment.

Example:
COM+00448132445322:TE'

5. Segments Layout

Segment number: 21

SG12	- C	99 -	ALC-DTM-SG15-SG17
ALC	- M	1 -	Allowance or charge

Function:

To identify allowance or charge details.

		EDIFACT	GS1	*	Description
5463	Allowance or charge code qualifier	M an..3	**M**		A = Allowance C = Charge
C552	ALLOWANCE/CHARGE INFORMATION	C	**O**		
1230	Allowance or charge identifier	C an..35	**D**		If code '69' is used in DE 5189, the agreement number must be specified in DE 1230.
5189	Allowance or charge identification code	C an..3	**O**		1 = Handling commission 32 = Courier fee 69 = Charge for a customer specific finish
4471	Settlement means code	C an..3	**O**		1 = Bill back 2 = Off invoice 5 = Charge to be paid by vendor 6 = Charge to be paid by customer
1227	Calculation sequence code	C an..3	**D**		1 = First step of calculation 2 = Second step of calculation 9 = Ninth step of calculation The calculation sequence indicator is used when multiple allowances and/or charges are applicable. If various allowances and/or charges percentages, quantities, monetary amounts, or, rates are applicable to the same base price, then the calculation sequence indicator will always equal one. If the various allowances and/or charges are applied against a fluctuating price (constantly changing because of the application of other allowances and/or charges) then the sequence of calculation is indicated using this data element.
C214	SPECIAL SERVICES IDENTIFICATION	C	**D**		
7161	Special service description code	C an..3	**R**		DDA = Dealer discount/allowance (GS1 Temporary Code) TD = Trade discount
1131	Code list identification code	C an..17	**O**		
3055	Code list responsible agency code	C an..3	**D**	*	9 = GS1
7160	Special service description	C an..35	**O**		
7160	Special service description	C an..35	**O**		

Segment Notes:

This segment is used to indicate any allowances or charges applicable to the total contract , e.g. packaging costs. Allowances or charges specified in the detail section do not override or replace allowances or charges specified at header level but compliment them.

Example:
ALC+C++6+1+DDA::9'
Freight charges to be paid by the customer.

5. Segments Layout

Segment number: 22

SG12	- C	99 -	ALC-DTM-SG15-SG17
DTM	- C	99 -	Date/time/period

Function:

To specify date, and/or time, or period.

		EDIFACT	GS1	*	Description
C507	DATE/TIME/PERIOD	M	**M**		
2005	Date or time or period function code qualifier	M an..3	**M**	*	194 = Start date/time 206 = End date/time 257 = Calculation date/time/period
2380	Date or time or period value	C an..35	**R**		
2379	Date or time or period format code	C an..3	**R**		801 = Year 802 = Month 810 = Trimester

Segment Notes:

This segment is used to indicate the dates relating to the allowances and charges described in the ALC segment.

Example:
DTM+257:2202:801'

5. Segments Layout

Segment number: 23

SG12	- C	99 -	ALC-DTM-SG15-SG17
SG15	- C	99 -	PCD-RNG
PCD	- M	1 -	Percentage details

Function:

To specify percentage information.

		EDIFACT	GS1	*	Description
C501	PERCENTAGE DETAILS	M	**M**		
5245	Percentage type code qualifier	M an..3	**M**		3 = Allowance or charge
5482	Percentage	C n..10	**R**		
5249	Percentage basis identification code	C an..3	**O**		
1131	Code list identification code	C an..17	**O**		
3055	Code list responsible agency code	C an..3	**D**		
4405	Status description code	C an..3	**N**		

Segment Notes:

This segment is used to specify information about the percentages of the allowance and or charges.

Example:
PCD+3:1.25'

5. Segments Layout

Segment number: 24

SG12	- C	99 -	ALC-DTM-SG15-SG17
SG15	- C	99 -	PCD-RNG
RNG	- C	99 -	Range details

Function:

To identify a range.

		EDIFACT	GS1	*	Description
6167	Range type code qualifier	M an..3	**M**		1 = Allowance range 2 = Charge range
C280	RANGE	C	**R**		
6411	Measurement unit code	M an..3	**O**		
6162	Range minimum value	C n..18	**O**		
6152	Range maximum value	C n..18	**O**		

Segment Notes:

This segment is used to specify ranges which apply to the previous PCD segment.

Example:
RNG+1+KGM:250'

5. Segments Layout

Segment number: 25

SG12	- C	99 -	ALC-DTM-SG15-SG17
SG17	- C	99 -	MOA-RNG
MOA	- M	1 -	Monetary amount

Function:

To specify a monetary amount.

		EDIFACT	GS1	*	Description
C516	MONETARY AMOUNT	M	**M**		
5025	Monetary amount type code qualifier	M an..3	**M**		23 = Charge amount 204 = Allowance amount
5004	Monetary amount	C n..35	**R**		
6345	Currency identification code	C an..3	**O**		
6343	Currency type code qualifier	C an..3	**O**		
4405	Status description code	C an..3	**O**		

Segment Notes:

This segment is used to specify monetary values concerning the allowances and charges.

Example:
MOA+23:500'

5. Segments Layout

Segment number: 26

SG12	- C	99 -	ALC-DTM-SG15-SG17
SG17	- C	99 -	MOA-RNG
RNG	- C	99 -	Range details

Function:

To identify a range.

		EDIFACT	GS1	*	Description
6167	Range type code qualifier	M an..3	**M**		3 = Monetary range
C280	RANGE	C	**R**		
6411	Measurement unit code	M an..3	**M**		KGM = kilogram H87 = Piece
6162	Range minimum value	C n..18	**O**		
6152	Range maximum value	C n..18	**O**		

Segment Notes:

This segment is used to specify ranges which apply to the previous MOA segment.

Example:
RNG+3+PCE:50:5000'

5. Segments Layout

Segment number: 27

SG22	- C	99 -	LIN-PIA-IMD-SG23-SG24-SG26-SG29-SG36-SG37-SG38-SG40
LIN	- M	1 -	Line item

Function:

To identify a line item and configuration.

		EDIFACT	GS1	*	Description
1082	Line item identifier	C an..6	**R**		Application generated number of the item lines within the contract.
1229	Action request/notification description code	C an..3	**N**		
C212	ITEM NUMBER IDENTIFICATION	C	**D**		This composite is only used for the identification of GS1 codes. If another coding structure is required, e. g., HIBC, this composite will not be used and the code will be detailed in the PIA segment.
7140	Item identifier	C an..35	**R**		Format n..14 GTIN - this is the number of the article in the contract.
7143	Item type identification code	C an..3	**R**	*	SRV = GS1 Global Trade Item Number
1131	Code list identification code	C an..17	**N**		
3055	Code list responsible agency code	C an..3	**N**		
C829	SUB-LINE INFORMATION	C	**D**		
5495	Sub-line indicator code	C an..3	**R**		
1082	Line item identifier	C an..6	**R**		
1222	Configuration level number	C n..2	**N**		
7083	Configuration operation code	C an..3	**N**		

Segment Notes:

This segment is used to indicate the beginning of the detail section of the Contractual Conditions message. The detail section is formed by a repeating group of segments, always starting with a LIN segment.
If Global Trade Item Numbers are available it is mandatory to use GTIN within the LIN segment.

Dependency Notes:
C829 is only used when sub-lines are required.
FOR A COMPLETE DESCRIPTION ON THE USAGE OF SUB-LINES PLEASE REFER TO PART I, SECTION 4.10.

Example:
LIN+1++4000862141404:SRV'

5. Segments Layout

Segment number: 28

SG22	- C	99 -	LIN-PIA-IMD-SG23-SG24-SG26-SG29-SG36-SG37-SG38-SG40
PIA	- C	99 -	Additional product id

Function:

To specify additional or substitutional item identification codes.

		EDIFACT	GS1	*	Description
4347	Product identifier code qualifier	M an..3	**M**	*	1 = Additional identification 5 = Product identification Product Id function coded has the following restricted coded functions: 1 - Additional Identification - To provide an additional identity for the product identified in the LIN segment. The additional identification can consist of : A supplemental identification which provides more information complementary to the main GTIN provided in the LIN segment, e.g. a batch number, promotional variant number, product group number, etc. An alternative identification which may be used instead of the main GTIN provided in the LIN segment, e.g. a buyers article number, an HIBC code, etc. 5 - Product Identification - To provide the primary product identification code when no GTIN has been provided in the LIN segment.
C212	ITEM NUMBER IDENTIFICATION	M	**M**		
7140	Item identifier	C an..35	**R**		
7143	Item type identification code	C an..3	**R**		BP = Buyer's part number SA = Supplier's article number SRV = GS1 Global Trade Item Number
1131	Code list identification code	C an..17	**O**		
3055	Code list responsible agency code	C an..3	**D**		9 = GS1 91 = Assigned by supplier or supplier's agent 92 = Assigned by buyer or buyer's agent
C212	ITEM NUMBER IDENTIFICATION	C	**O**		
7140	Item identifier	C an..35	**R**		
7143	Item type identification code	C an..3	**R**		
1131	Code list identification code	C an..17	**O**		
3055	Code list responsible agency code	C an..3	**D**		
C212	ITEM NUMBER IDENTIFICATION	C	**O**		
7140	Item identifier	C an..35	**R**		
7143	Item type identification code	C an..3	**R**		
1131	Code list identification code	C an..17	**O**		
3055	Code list responsible agency code	C an..3	**D**		
C212	ITEM NUMBER IDENTIFICATION	C	**O**		

5. Segments Layout

Segment number: 28

		EDIFACT	GS1	*	Description
7140	Item identifier	C an..35	**R**		
7143	Item type identification code	C an..3	**R**		
1131	Code list identification code	C an..17	**O**		
3055	Code list responsible agency code	C an..3	**D**		
C212	ITEM NUMBER IDENTIFICATION	C	**O**		
7140	Item identifier	C an..35	**R**		
7143	Item type identification code	C an..3	**R**		
1131	Code list identification code	C an..17	**O**		
3055	Code list responsible agency code	C an..3	**D**		

Segment Notes:

This segment is used to specify additional or substitutional item identification codes such as a buyer's or supplier's item number.

Examples:
PIA+1+ABC5343:IN'
In this example the PIA segment is used to provide an additional identification to the GTIN provided in the LIN segment. The GTIN 4000862141404 provided in the LIN segment refers to the internal buyer's item number ABC5343.

PIA+5+2209953C001L:AC'
This example details the HIBC code 2209953C001L which is provided as the primary product code because no GTIN was provided in the LIN segment.

5. Segments Layout

Segment number: 29

SG22	- C	99 -	LIN-PIA-IMD-SG23-SG24-SG26-SG29-SG36-SG37-SG38-SG40
IMD	- C	99 -	Item description

Function:

To describe an item in either an industry or free format.

		EDIFACT	GS1	*	Description
7077	Description format code	C an..3	**O**	*	A = Free-form long description B = Code and text C = Code (from industry code list) E = Free-form short description F = Free-form S = Structured (from industry code list)
C272	ITEM CHARACTERISTIC	C	**O**		
7081	Item characteristic code	C an..3	**R**		
1131	Code list identification code	C an..17	**O**		
3055	Code list responsible agency code	C an..3	**D**	*	9 = GS1 Must be used if DE7081 contains an GS1 code.
C273	ITEM DESCRIPTION	C	**A**		
7009	Item description code	C an..17	**O**		CU = Consumer unit (GS1 Permanent Code) DU = Despatch unit (GS1 Permanent Code) RC = Returnable container (GS1 Permanent Code) SER = Service (GS1 Permanent Code) TU = Traded unit (GS1 Permanent Code) VQ = Variable quantity product (GS1 Permanent Code)
1131	Code list identification code	C an..17	**O**		
3055	Code list responsible agency code	C an..3	**D**		9 = GS1 91 = Assigned by supplier or supplier's agent 92 = Assigned by buyer or buyer's agent
7008	Item description	C an..256	**O**		
7008	Item description	C an..256	**O**		
3453	Language name code	C an..3	**O**		
7383	Surface or layer code	C an..3	**N**		

Segment Notes:

This segment is used to provide a description for the current line item.
It is recommended that this segment only be used for coded descriptions. Data element 7008 in clear text should only be used when no product code is available or when free-form descriptions are required by trading partners to communicate basic product descriptions.
Should you wish to indicate that promotional details are marked on the package, then this should be indicated in DE 7233 in the PAC segment

Example:
IMD+C++TU::9'
IMD+F++:::CORN CRUNCHIES:CASE'

5. Segments Layout

Segment number: 30

SG22	- C	99 -	LIN-PIA-IMD-SG23-SG24-SG26-SG29-SG36-SG37-SG38-SG40
SG23	- C	99 -	RFF-DTM
RFF	- M	1 -	Reference

Function:

To specify a reference.

		EDIFACT	GS1	*	Description
C506	REFERENCE	M	**M**		
1153	Reference code qualifier	M an..3	**M**		AAL = Drawing number XB5 = Tooling contract number (GS1 Temporary Code) XB6 = Formula number (GS1 Temporary Code) SZ = Specification number
1154	Reference identifier	C an..70	**R**		
1156	Document line identifier	C an..6	**O**		
4000	Reference version identifier	C an..35	**N**		
1060	Revision identifier	C an..6	**N**		

Segment Notes:

This segment is used to provide references specific to the line item, and overrides any global references provided in the heading section of the message, if the same code value is used.

Example:
RFF+AAL:8306'

5. Segments Layout

Segment number: 31

SG22	- C	99 -	LIN-PIA-IMD-SG23-SG24-SG26-SG29-SG36-SG37-SG38-SG40
SG23	- C	99 -	RFF-DTM
DTM	- C	99 -	Date/time/period

Function:

To specify date, and/or time, or period.

		EDIFACT	GS1	*	Description
C507	DATE/TIME/PERIOD	M	**M**		
2005	Date or time or period function code qualifier	M an..3	**M**	*	171 = Reference date/time
2380	Date or time or period value	C an..35	**R**		
2379	Date or time or period format code	C an..3	**R**		102 = CCYYMMDD

Segment Notes:

This segment is used to specify dates related to the RFF segment.

Example:
DTM+171:20020830:102'

5. Segments Layout

Segment number: 32

SG22	- C	99 -	LIN-PIA-IMD-SG23-SG24-SG26-SG29-SG36-SG37-SG38-SG40
SG24	- C	99 -	TAX
TAX	- M	1 -	Duty/tax/fee details

Function:

To specify relevant duty/tax/fee information.

		EDIFACT	GS1	*	Description
5283	Duty or tax or fee function code qualifier	M an..3	**M**		5 = Customs duty 7 = Tax
C241	DUTY/TAX/FEE TYPE	C	**D**		
5153	Duty or tax or fee type name code	C an..3	**O**		GST = Goods and services tax VAT = Value added tax
1131	Code list identification code	C an..17	**O**		
3055	Code list responsible agency code	C an..3	**D**		
5152	Duty or tax or fee type name	C an..35	**O**		
C533	DUTY/TAX/FEE ACCOUNT DETAIL	C	**O**		
5289	Duty or tax or fee account code	M an..6	**M**		
1131	Code list identification code	C an..17	**O**		
3055	Code list responsible agency code	C an..3	**D**		
5286	Duty or tax or fee assessment basis value	C an..15	**O**		
C243	DUTY/TAX/FEE DETAIL	C	**A**		
5279	Duty or tax or fee rate code	C an..7	**O**		
1131	Code list identification code	C an..17	**O**		
3055	Code list responsible agency code	C an..3	**D**		
5278	Duty or tax or fee rate	C an..17	**R**		The actual rate of tax/duty.
5273	Duty or tax or fee rate basis code	C an..12	**O**		
1131	Code list identification code	C an..17	**O**		
3055	Code list responsible agency code	C an..3	**D**		
5305	Duty or tax or fee category code	C an..3	**D**		A = Mixed tax rate E = Exempt from tax S = Standard rate
3446	Party tax identifier	C an..20	**O**		
1227	Calculation sequence code	C an..3	**N**		

Segment Notes:

This segment is used to specify tax details for the line item if different to the header.

Dependency Notes:
DE C241 and 5305: Tax types and categories will differ from country to country. They are to be defined by national guidelines.

5. Segments Layout

Segment number: 32

Example:
TAX+7+VAT+++:::21+S'

5. Segments Layout

Segment number: 33

SG22	- C	99 -	LIN-PIA-IMD-SG23-SG24-SG26-SG29-SG36-SG37-SG38-SG40
SG26	- C	99 -	QTY-DTM
QTY	- M	1 -	Quantity

Function:

To specify a pertinent quantity.

		EDIFACT	GS1	*	Description
C186	QUANTITY DETAILS	M	**M**		
6063	Quantity type code qualifier	M an..3	**M**		135 = Period quantity, planned 75E = Optional quantity (GS1 Temporary Code)
6060	Quantity	M an..35	**M**		
6411	Measurement unit code	C an..3	**D**		

Segment Notes:

This segment is used to identify the quantity and the optional quantity of the line item.

Example:
QTY+135:200'

5. Segments Layout

Segment number: 34

SG22	- C	99 -	LIN-PIA-IMD-SG23-SG24-SG26-SG29-SG36-SG37-SG38-SG40
SG26	- C	99 -	QTY-DTM
DTM	- C	99 -	Date/time/period

Function:

To specify date, and/or time, or period.

		EDIFACT	GS1	*	Description
C507	DATE/TIME/PERIOD	M	**M**		
2005	Date or time or period function code qualifier	M an..3	**M**		21E = End validity date (GS1 Temporary Code)
2380	Date or time or period value	C an..35	**R**		
2379	Date or time or period format code	C an..3	**R**		102 = CCYYMMDD

Segment Notes:

This segment is used to indicate the dates related to previous QTY segment.

Example:
DTM+21E:20020701:102'

5. Segments Layout

Segment number: 35

SG22	- C	99 -	LIN-PIA-IMD-SG23-SG24-SG26-SG29-SG36-SG37-SG38-SG40
SG29	- C	99 -	ALC-DTM-SG32-SG34
ALC	- M	1 -	Allowance or charge

Function:

To identify allowance or charge details.

		EDIFACT	GS1	*	Description
5463	Allowance or charge code qualifier	M an..3	**M**		A = Allowance C = Charge
C552	ALLOWANCE/CHARGE INFORMATION	C	**O**		
1230	Allowance or charge identifier	C an..35	**D**		If code '69' is used in DE 5189, the agreement number must be specified in DE 1230.
5189	Allowance or charge identification code	C an..3	**O**		1 = Handling commission 32 = Courier fee 69 = Charge for a customer specific finish
4471	Settlement means code	C an..3	**O**		1 = Bill back 2 = Off invoice 5 = Charge to be paid by vendor 6 = Charge to be paid by customer
1227	Calculation sequence code	C an..3	**D**		1 = First step of calculation 2 = Second step of calculation 9 = Ninth step of calculation The calculation sequence indicator is used when multiple allowances and/or charges are applicable. If various allowances and/or charges percentages, quantities, monetary amounts, or, rates are applicable to the same base price, then the calculation sequence indicator will always equal one. If the various allowances and/or charges are applied against a fluctuating price (constantly changing because of the application of other allowances and/or charges) then the sequence of calculation is indicated using this data element. If the allowance or charge is not to be applied against a fixed price then the calculation sequence indicator must be included.
C214	SPECIAL SERVICES IDENTIFICATION	C	**D**		This composite is only included if the buyer knows the type of allowance or charge and is agreed between trading partners in their interchange agreement.
7161	Special service description code	C an..3	**R**		ADS = Full pallet ordering ADT = Pick-up AJ = Adjustments CAC = Cash discount AEK = Cash on delivery service FC = Freight charge QD = Quantity discount
1131	Code list identification code	C an..17	**O**		
3055	Code list responsible agency code	C an..3	**D**	*	9 = GS1 Code value 9 is used when GS1 codes are used in DE 7161.
7160	Special service description	C an..35	**O**		

5. Segments Layout

7160	Special service description	C an..35	**O**		

5. Segments Layout

Segment number: 35

Segment Notes:

This segment is used to specify any allowances or charges which apply only to the line item being contracted.

ALC+A+++1'

5. Segments Layout

Segment number: 36

SG22	- C	99 -	LIN-PIA-IMD-SG23-SG24-SG26-SG29-SG36-SG37-SG38-SG40
SG29	- C	99 -	ALC-DTM-SG32-SG34
DTM	- C	99 -	Date/time/period

Function:

To specify date, and/or time, or period.

		EDIFACT	GS1	*	Description
C507	DATE/TIME/PERIOD	M	**M**		
2005	Date or time or period function code qualifier	M an..3	**M**	*	273 = Validity period 257 = Calculation date/time/period
2380	Date or time or period value	C an..35	**R**		
2379	Date or time or period format code	C an..3	**R**		717 = YYMMDD-YYMMDD

Segment Notes:

This segment is used to indicate the dates relating to the allowances and charges described in the ALC segment.

Example:
DTM+273:020505020505:717'

5. Segments Layout

Segment number: 37

SG22	- C	99 -	LIN-PIA-IMD-SG23-SG24-SG26-SG29-SG36-SG37-SG38-SG40
SG29	- C	99 -	ALC-DTM-SG32-SG34
SG32	- C	99 -	PCD-RNG
PCD	- M	1 -	Percentage details

Function:

To specify percentage information.

		EDIFACT	GS1	*	Description
C501	PERCENTAGE DETAILS	M	**M**		
5245	Percentage type code qualifier	M an..3	**M**		3 = Allowance or charge
5482	Percentage	C n..10	**R**		
5249	Percentage basis identification code	C an..3	**O**		
1131	Code list identification code	C an..17	**O**		
3055	Code list responsible agency code	C an..3	**D**		
4405	Status description code	C an..3	**N**		

Segment Notes:

This segment is used to specify information about the percentages of the allowance and or charges.

Example:
PCD+3:1.25'

5. Segments Layout

Segment number: 38

SG22	- C	99 -	LIN-PIA-IMD-SG23-SG24-SG26-SG29-SG36-SG37-SG38-SG40
SG29	- C	99 -	ALC-DTM-SG32-SG34
SG32	- C	99 -	PCD-RNG
RNG	- C	99 -	Range details

Function:

To identify a range.

		EDIFACT	GS1	*	Description
6167	Range type code qualifier	M an..3	**M**		1 = Allowance range 2 = Charge range
C280	RANGE	C	**R**		
6411	Measurement unit code	M an..3	**M**		KGM = kilogram H87 = Piece
6162	Range minimum value	C n..18	**O**		
6152	Range maximum value	C n..18	**O**		

Segment Notes:

This segment is used to specify ranges which apply to the previous PCD segment.

Example:
RNG+1+KGM:250'

5. Segments Layout

Segment number: 39

SG22	- C	99 -	LIN-PIA-IMD-SG23-SG24-SG26-SG29-SG36-SG37-SG38-SG40
SG29	- C	99 -	ALC-DTM-SG32-SG34
SG34	- C	99 -	MOA-RNG
MOA	- M	1 -	Monetary amount

Function:

To specify a monetary amount.

		EDIFACT	GS1	*	Description
C516	MONETARY AMOUNT	M	**M**		
5025	Monetary amount type code qualifier	M an..3	**M**		23 = Charge amount 204 = Allowance amount
5004	Monetary amount	C n..35	**R**		
6345	Currency identification code	C an..3	**O**		Code ISO 4217 three alpha
6343	Currency type code qualifier	C an..3	**O**		
4405	Status description code	C an..3	**O**		

Segment Notes:

This segment is used to specify monetary values concerning the allowances and charges.

Example:
MOA+23:500'

5. Segments Layout

Segment number: 40

SG22	- C	99 -	LIN-PIA-IMD-SG23-SG24-SG26-SG29-SG36-SG37-SG38-SG40
SG29	- C	99 -	ALC-DTM-SG32-SG34
SG34	- C	99 -	MOA-RNG
RNG	- C	99 -	Range details

Function:

To identify a range.

		EDIFACT	GS1	*	Description
6167	Range type code qualifier	M an..3	**M**		3 = Monetary range
C280	RANGE	C	**R**		
6411	Measurement unit code	M an..3	**M**		KGM = kilogram H87 = Piece
6162	Range minimum value	C n..18	**O**		
6152	Range maximum value	C n..18	**O**		

Segment Notes:

This segment is used to specify ranges which apply to the previous MOA segment.

Example:
RNG+3+PCE:50:5000'

5. Segments Layout

Segment number: 41

SG22	- C	99 -	LIN-PIA-IMD-SG23-SG24-SG26-SG29-SG36-SG37-SG38-SG40
SG36	- C	99 -	PRI-RNG-DTM
PRI	- M	1 -	Price details

Function:

To specify price information.

		EDIFACT	GS1	*	Description
C509	PRICE INFORMATION	C	**R**		
5125	Price code qualifier	M an..3	**M**		AAA = Calculation net AAB = Calculation gross Note 1 Code AAA: The price stated is the net price including all allowances and charges and excluding taxes. Note 2 Code AAB: The price stated is the gross price excluding all allowances, charges and taxes.
5118	Price amount	C n..15	**R**		
5375	Price type code	C an..3	**O**		CA = Catalogue
5387	Price specification code	C an..3	**O**		
5284	Unit price basis value	C n..9	**D**		
6411	Measurement unit code	C an..3	**D**		KGM = kilogram
5213	Sub-line item price change operation code	C an..3	**N**		

Segment Notes:

This segment is used to specify price information for the current line item.

Dependency Notes:
Data elements 5284 and 6411 are used when a product is a variable quantity product, e.g. price per 200 kilos, or when the unit of measure for purchasing, delivery, and invoicing are different for a product, e.g. sugar is not a variable quantity product but ordered and delivered in packs, and invoiced in kilos or tonnes.

Example:
For all the following examples the invoicing currency has already been identified as EURO.
PRI+AAA:14.50:CA'
Net price of 14.50 (excluding tax) to be used for calculation purposes. This price includes all allowances and charges. The price is a catalogue price.
PRI+AAB:25:CT'
Gross calculation price of 25 (excluding tax) which does not include any allowances or charges. The price is a contract price.

5. Segments Layout

Segment number: 42

SG22	- C	99 -	LIN-PIA-IMD-SG23-SG24-SG26-SG29-SG36-SG37-SG38-SG40
SG36	- C	99 -	PRI-RNG-DTM
RNG	- C	99 -	Range details

Function:

To identify a range.

		EDIFACT	GS1	*	Description
6167	Range type code qualifier	M an..3	**M**		4 = Quantity range
C280	RANGE	C	**R**		
6411	Measurement unit code	M an..3	**M**		KGM = kilogram H87 = Piece
6162	Range minimum value	C n..18	**O**		
6152	Range maximum value	C n..18	**O**		

Segment Notes:

This segment is used to specify ranges which apply to the previous PRI segment.

Example:
RNG+4+PCE:50:5000'

5. Segments Layout

Segment number: 43

SG22	- C	99 -	LIN-PIA-IMD-SG23-SG24-SG26-SG29-SG36-SG37-SG38-SG40
SG36	- C	99 -	PRI-RNG-DTM
DTM	- C	99 -	Date/time/period

Function:

To specify date, and/or time, or period.

		EDIFACT	GS1	*	Description
C507	DATE/TIME/PERIOD	M	**M**		
2005	Date or time or period function code qualifier	M an..3	**M**		157 = Validity start date 273 = Validity period 21E = End validity date (GS1 Temporary Code)
2380	Date or time or period value	C an..35	**R**		
2379	Date or time or period format code	C an..3	**R**		102 = CCYYMMDD 718 = CCYYMMDD-CCYYMMDD

Segment Notes:

This segment is specify dates and times relevant to the prices provided in the previous PRI segment.

Example:
DTM+157:20021111:102'

5. Segments Layout

Segment number: 44

SG22	- C	99 -	LIN-PIA-IMD-SG23-SG24-SG26-SG29-SG36-SG37-SG38-SG40
SG37	- C	99 -	TOD
TOD	- M	1 -	Terms of delivery or transport

Function:

To specify terms of delivery or transport.

		EDIFACT	GS1	*	Description
4055	Delivery or transport terms function code	C an..3	**R**		3 = Price and despatch condition 6 = Delivery condition
4215	Transport charges payment method code	C an..3	**O**		DF = Defined by buyer and supplier PC = Prepaid but charged to customer
C100	TERMS OF DELIVERY OR TRANSPORT	C	**R**		
4053	Delivery or transport terms description code	C an..3	**R**		INCOTERMS (See EANCOM Codes Set) If INCOTERMS are applicable, then DE 3055 has to contain code value "9" and DE 1131 must be used.
1131	Code list identification code	C an..17	**D**		
3055	Code list responsible agency code	C an..3	**D**		
4052	Delivery or transport terms description	C an..70	**O**		
4052	Delivery or transport terms description	C an..70	**O**		

Segment Notes:

This segment is used to specify the terms of delivery.

Example:
TOD+3++CIF:2E:9'

5. Segments Layout

Segment number: 45

SG22	- C	99 -	LIN-PIA-IMD-SG23-SG24-SG26-SG29-SG36-SG37-SG38-SG40
SG38	- C	99 -	PAC
PAC	- M	1 -	Package

Function:

To describe the number and type of packages/physical units.

		EDIFACT	GS1	*	Description
7224	Package quantity	C n..8	**O**		This data element can be used to specify the number of despatch units used to ship the ordered number of consumer units, in those cases where despatch unit coding has not yet been implemented.
C531	PACKAGING DETAILS	C	**O**		
7075	Packaging level code	C an..3	**O**		
7233	Packaging related description code	C an..3	**O**		
7073	Packaging terms and conditions code	C an..3	**O**		1 = Packaging cost paid by supplier 2 = Packaging cost paid by recipient 3 = Packaging cost not charged (returnable)
C202	PACKAGE TYPE	C	**O**		
7065	Package type description code	C an..17	**A**		AE = CR = CX =
1131	Code list identification code	C an..17	**O**		
3055	Code list responsible agency code	C an..3	**D**		
7064	Type of packages	C an..35	**O**		
C402	PACKAGE TYPE IDENTIFICATION	C	**N**		
7077	Description format code	M an..3			
7064	Type of packages	M an..35			
7143	Item type identification code	C an..3			
7064	Type of packages	C an..35			
7143	Item type identification code	C an..3			
C532	RETURNABLE PACKAGE DETAILS	C	**D**		Composite C532 is only used where the packaging being described is returnable. This composite identifies who is responsible for payment of its return.
8395	Returnable package freight payment responsibility code	C an..3	**O**		1 = Paid by customer 3 = Paid by supplier
8393	Returnable package load contents code	C an..3	**N**		

Segment Notes:

This segment is used to specify the number and type of packages for the current line item.

Example:
PAC+++CR++3'

5. Segments Layout

Segment number: 46

SG22	- C	99 -	LIN-PIA-IMD-SG23-SG24-SG26-SG29-SG36-SG37-SG38-SG40
SG40	- C	99 -	NAD
NAD	- M	1 -	Name and address

Function:

To specify the name/address and their related function, either by C082 only and/or unstructured by C058 or structured by C080 thru 3207.

		EDIFACT	GS1	*	Description
3035	Party function code qualifier	M an..3	**M**		DP = Delivery party MF = Manufacturer of goods
C082	PARTY IDENTIFICATION DETAILS	C	**A**		
3039	Party identifier	M an..35	**M**		For identification of parties it is recommended to use GLN - Format n13.
1131	Code list identification code	C an..17	**N**		
3055	Code list responsible agency code	C an..3	**R**	*	9 = GS1
C058	NAME AND ADDRESS	C	**O**		This composite may only be used to fulfill the requirements of directive 2003/58/EC, article 4.
3124	Name and address description	M an..35	**M**		
3124	Name and address description	C an..35	**O**		
3124	Name and address description	C an..35	**O**		
3124	Name and address description	C an..35	**O**		
3124	Name and address description	C an..35	**O**		
C080	PARTY NAME	C	**D**		
3036	Party name	M an..35	**M**		Party Name in clear text.
3036	Party name	C an..35	**O**		
3036	Party name	C an..35	**O**		
3036	Party name	C an..35	**O**		
3036	Party name	C an..35	**O**		
3045	Party name format code	C an..3	**O**		
C059	STREET	C	**D**		
3042	Street and number or post office box identifier	M an..35	**M**		Building Name/Number and Street Name
3042	Street and number or post office box identifier	C an..35	**O**		
3042	Street and number or post office box identifier	C an..35	**O**		
3042	Street and number or post office box identifier	C an..35	**O**		
3164	City name	C an..35	**D**		City/Town name, clear text
C819	COUNTRY SUB-ENTITY DETAILS	C	**D**		
3229	Country sub-entity name code	C an..9	**O**		
1131	Code list identification code	C an..17	**O**		
	Code list responsible agency				

5. Segments Layout

Segment number: 46

		EDIFACT	GS1	*	Description
3055	code	C an..3	**O**		
3228	Country sub-entity name	C an..70	**O**		County/State, clear text.
3251	Postal identification code	C an..17	**D**		Postal Code
3207	Country name code	C an..3	**D**		ISO 3166 two alpha code

Segment Notes:

This segment is used to indicate the manufacturing plant and the delivery party of the article.

Example:
NAD+DP+5412345000013::9'

Dependency Notes:
The following composites and data elements are only used when a coded name and address can not be used.
The affected composites and data elements are as follows:
C080 - C059 - 3164 - C819 - 3251 - 3207

5. Segments Layout

Segment number: 47

UNT - M 1 - Message trailer

Function:

To end and check the completeness of a message.

Notes:
1. 0062, the value shall be identical to the value in 0062 in the corresponding UNH segment.

		EDIFACT	GS1	*	Description
0074	Number of segments in a message	M n..10	**M**		The total number of segments in the message is detailed here.
0062	Message reference number	M an..14	**M**		The message reference numbered detailed here should equal the one specified in the UNH segment.

Segment Notes:

This segment is a mandatory UN/EDIFACT segment. It must always be the last segment in the message.

Example:
UNT+47+ME000001'

6. Examples

The following is an example of a contractual conditions message sent from a buyer identified by GLN 5412345000020 to a supplier identified by GLN 4012345500004.

The following conditions have been decided on:

- Payments will be made by cheque;

- The INCOTERM CIF will apply;

- The reference currency is the Euro;

- Payments will be made 30 days after the date of invoice;

- The charges for the collection and recycling services are to be paid by customer.

These conditions also apply to the articles with GTIN 4000862141404 and 4000862141424, except for the INCOTERMS, the price and the taxes.

UNH+ME000001+CNTCND:D:01A:UN:EAN003'	Message header
BGM+315+100001+9'	Contract number 100001
DTM+137:20020830:102'	Message date 30th of August 2002.
PAI+::20'	Payment will be made by cheque.
TOD+3++CIF:2E:9'	The INCOTERM CIF will apply.
RFF+PL:1259874'	The contract is linked to the price list number 1259874.
DTM+171:20020730:102'	Reference date is 30th of July 2002.
CUX+2:EUR:9'	The reference currency is the Euro.
PAT+1++5:3:D:30'	Payment terms 30 days after date of invoice.
PCD+15:2.5:13'	The penalty percentage is 2.5 on the invoice value.
SEQ++1'	
NAD+BY+5412345000020::9'	Buyer identified by GLN 5412345000020;
CTA+IC+MARK CARTER'	The information contact is Mark Carter.
COM+00448132445322:TE'	His telephone number is 0044/8132445322.
SEQ++2'	
NAD+SU+4012345500004::9'	Supplier identified by GLN 4012345500004.
ALC+C++6++CRS'	The charges for the collection and recycling services are to be paid by customer.
PCD+3:2'	The charge amount is 2 Euros.
LIN+1++4000862141404:SRV'	Line item 1 identified by GTIN 400086214104.
TAX+7+VAT+++:::19+S'	Type of tax for the line item is value added tax at

6. Examples

	19%.
ALC+A+++1'	The allowance is a handling commission.
MOA+204:100'	The allowance amount is 100.
PRI+AAA:14.50'	Net price of 14.50, this price includes allowances and charges.
PAC+++CR++3'	The package is a crate paid by the supplier.
QTY+135:200'	The planned quantity for the period of the contract is 200.
DTM+21E:20020101:102'	This period ends on the first of January 2002.
LIN+2++4000862141424:SRV'	Line item 2 identified by GTIN 400086214124.
TAX+7+VAT+++:::19+S'	Type of tax for the line item is value added tax at 19%.
PRI+AAA:17'	Net price of 17, this price includes allowances and charges.
UNT+30+ME000001'	Total number of segments in the message equals 30.

Note:
The EDI interchange will include the UNB..UNZ segments and, if applicable, the UNG..UNE segments. (See part 1 section 5.7).